Alle Rechte vorbehalten/ *All rights reserved*

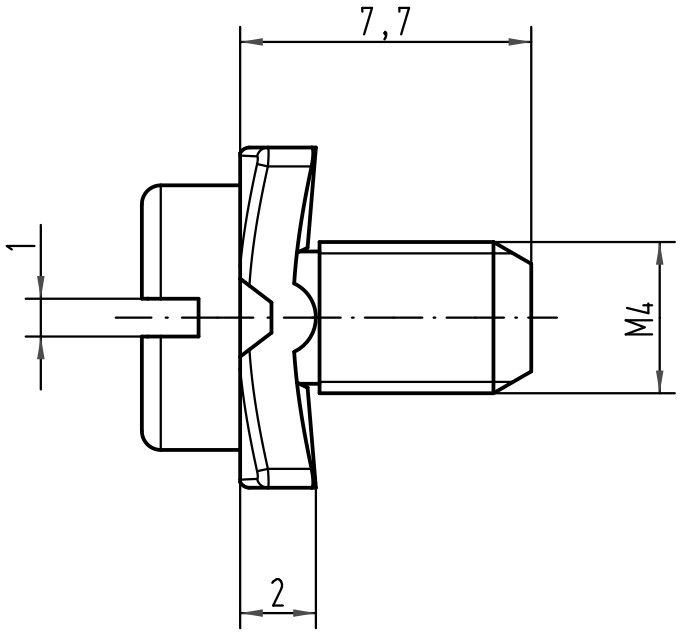


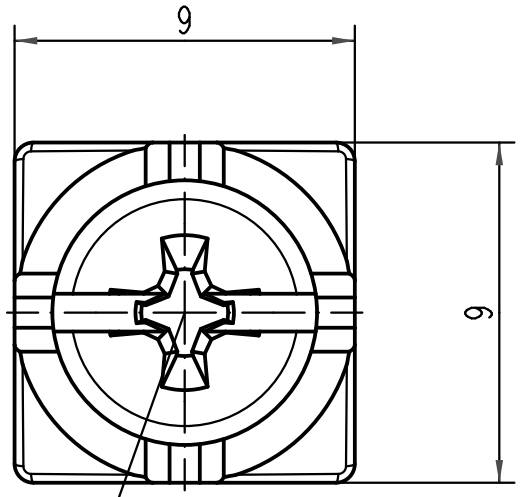


Kreutzschlitz H2/
*Cross recess H2*

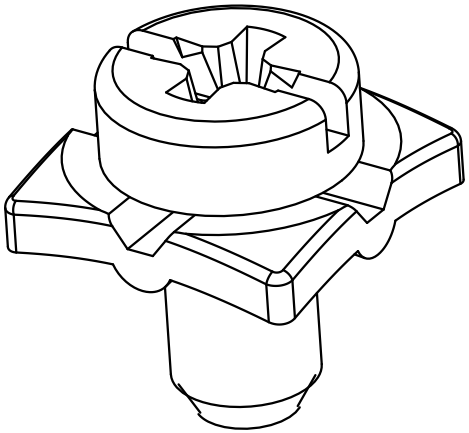

| | | | | | | |
|---|---|---|---|---|---|---|
| All Dimensions in mm<br>Original Size DIN A 4 | | | Techn. Character. | | | Nicht tolerierte Maße/ *Free size tolerances* |
| | | | | Dat. | Name | Maßstab/ *Scale* |
| | | | Detail. | 06.11.07 | Rull | 5:1 |
| | | | Insp. | | Sch | PE-Schraube<br>*PE-screw* |
| | | | Stand. | | | |
| | | | HARTING Electric GmbH & Co. KG<br>D-32339 Espelkamp | | | TB 09 33 000 9925 |
| 413214 | | | | | | Blatt/ *page* |
| Mod. | Dat. | Name | | | | Sub. |